Gas protection device

IRGP-30

IRGP Gas protection device

The IRGP-30 can be disassembled directly and enter the workpiece cylinder through holes with an inner diameter of 500mm respectively.
The device uses a gravity hammer to maintain balance and the gas cover can maintain a horizontal position.
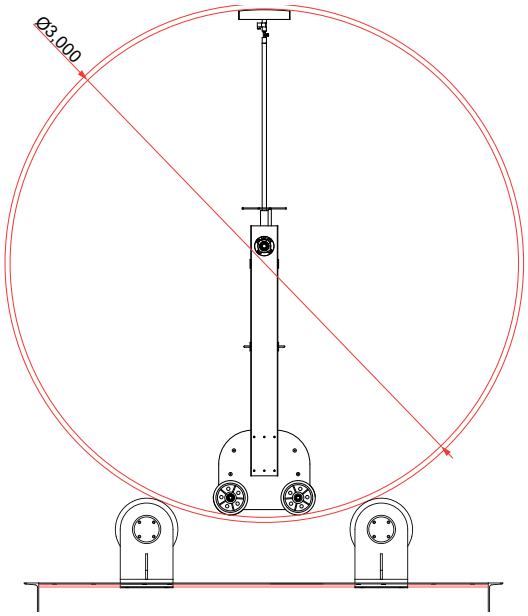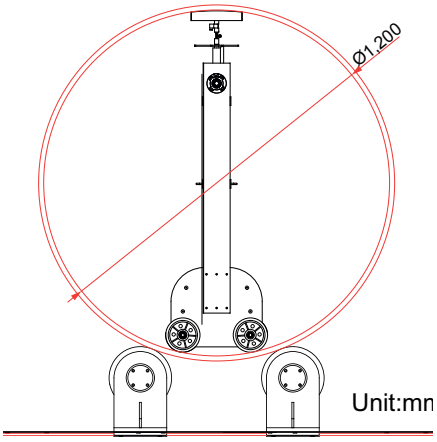
Model	IRGP-30
Power	AV1 : AC110V / 4A / 60Hz / 1Ø V2 : AC220V / 2A / 50Hz / 1Ø
Workpiece Ø	1200 - 3000 mm
Gas cover position	Gravity adjustment
Hose length	10 m
Item no.